SkyCrane
SC series
Aerial Lifts and Cranes

features

- Working Heights to 97'
- Dual purpose machine; aerial platform and crane
- Multiple tool and lamp box options
- Extra long lamp box option in sub-frame
- Easy ground level entry to Aerial platform
- Aerial remote controls
- Ground hydraulic controls
- Remote engine start / stop
- Auxiliary power unit
- Hydraulic and Gravity leveled platforms
- Platform Mounted Jib with Hydraulic Winch
- 360º Work Area
- Continuous Rotation
- Crane Tip Heights: 57', 60', 70', 85' & 92'
- Nylatron pad equipped booms
- Up to 6,000 lb lift capacity
- Up to 24,000 lb lift capacity for SC 85
- Detachable load line
- Radio anti-two block system
- Rugged, Weatherproof, Automotive style electrical system
- ORS Face Seal hydraulic fittings and adapters
- Unparalleled machine stability
- Heavy duty sub-frame
- Clamp-on mounting
- Design meets ANSI A92.2 and ANSI B30.5 recommendations

product guide

SkyCrane series

GENERAL SPECIFICATIONS

BOOM

Boom Sections - 4-plate design, telescopic booms equipped with teflon-plugged nylatron wear pads for smooth operation. Nylatron wear pads easily accessible for lubrication, inspection and replacement.

3-section booms extend and retract by internal telescoping hydraulic cylinder.

4-section boom telescope system consists of a telescoping cylinder and wire rope crowds.

Boom Point - Boom tip designed to easily accept Manitex Skycrane platforms. Detachable boom point sheave bracket (except SC 85) allows for easy removal and stowage of load line for aerial platform operation.

SC 85 only, "Quick Reeve" boom point design, accepts Manitex Skycrane platforms; facilitates parts of line configuration changes.

Boom Elevation - Double acting hydraulic cylinder; working range from 15º below horizontal to 85º above. Counterbalance valves hold cylinder and boom in position.

HOIST

Winch - Single or two speed planetary winch; wet multi-disc internal brake, spring applied, hydraulically released.

	SC62,SC65,SC75	SC85	SC97
Max Line Pull	5376 lb	7789 lb	5750 lb
Max Line Speed	78*	106*	333*
Rope Capacity	138 ft	219 ft	243 ft

*ft/min

Wire Rope - 3/8" or 1/2" diameter 6 x 25 IWRC wire rope.

Anti-two block - Wireless radio anti-two block system includes switch and receiver. Conforms to ANSI B30.5.

SWING SYSTEM

Swing Drive - Externally mounted single reduction worm gear swing drive; directly driven by a high-torque, low-speed hydraulic motor for smooth, controlled, operation. Swing speed is directly proportional by position of control lever.

Rotation - All SC series machines are equipped with hydraulic and electric swivels that allow continuous rotation in either direction.

OUTRIGGERS

Front and Rear Outriggers - Fully hydraulic outriggers extend to maximum overall spread for unparalleled machine stability. All cylinders equipped with check or counterbalance valves to ensure outriggers remain in position at all times. Jack cylinders operate independently for precise leveling; bubble level located near outrigger controls.

	SC62,SC65	SC75,SC85,SC97
Front Spread	10' opt	19' 9-3/4"
Rear Spread	18'6"	18'6"

MOUNTING

In true Manitex tradition, these machines are clamp mounted and require no drilling or welding to the truck chassis. This system allows for greater flexibility when positioning the machine on the chassis thus allowing the installer the ability to maximize available axle capacity.

Subframe - All SC series machines are equipped with a torsionally resistant, 4-plate, fabricated subframe that extends over the entire length of the truck chassis. The SC75, SC85 & SC97 sub-frame is fabricated with an integral outrigger base; this outrigger design further enhances the superior stability of the Manitex Skycrane.

Pedestal - Clamp mounted to the subframe and truck chassis with threaded rods and chassis clamp brackets.

Boom Rest - Heavy-duty fabricated boom rest secures boom in place when traveling.

BASKETS AND WORK PLATFORMS

Basket (standard) – One-man aluminum, gravity leveled basket. Equipped with safety lanyard anchor points; full body harness and lanyard for included. Basket is secured and cushioned by manual friction brakes and shock absorbers. Basket capacity is 300 lbs.

* In order to ensure continuous improvement, specifications may change without notice.

CONTROL SYSTEM

Outriggers – Valve mounted at the rear of the truck allows visibility to all outriggers for easy set-up.

Base station – Mounted on the curbside of the Turret, a four spool proportional control hydraulic valve operates the basic crane functions; elevation, rotation, telescope and loadline hoist. Controls for engine ignition start, throttle advance and emergency stop are also provided. Controls for the self leveling platform and hydraulic Jib winch added when appropriate.

Aerial platform – Platforms are equipped with a wired remote control system. The control box is fitted with electric joysticks to operate boom elevation, telescope, and rotation; basket control and Jib winch control. Switches for engine start/stop, emergency stop button, throttle advance, auxiliary pump is standard, optional generator start switch is also included when appropriate.

HYDRAULIC SYSTEMS

64 gallon tank fitted with 10 micron high pressure and return filters, gear pump variable to 20 GPM, 3000 maximum operating pressure at high engine speed.

GENERAL

Electrical - Connectorized automotive style electrical system is state-of-the-art, fitted with rugged, weather proof components throughout.

Design/Welding - Welding conforms to AWS D1.1. Design conforms to ANSI B30.5 (mobile cranes) and ANSI 92.2 (aerial devices).

Paint - Standard Manitex blue and gray.

Manuals - Operator and parts manuals depict correct machine operation, maintenance procedures and parts listings

Warranty - 12 month warranty covers parts and labor resulting from defects in material and workmanship.

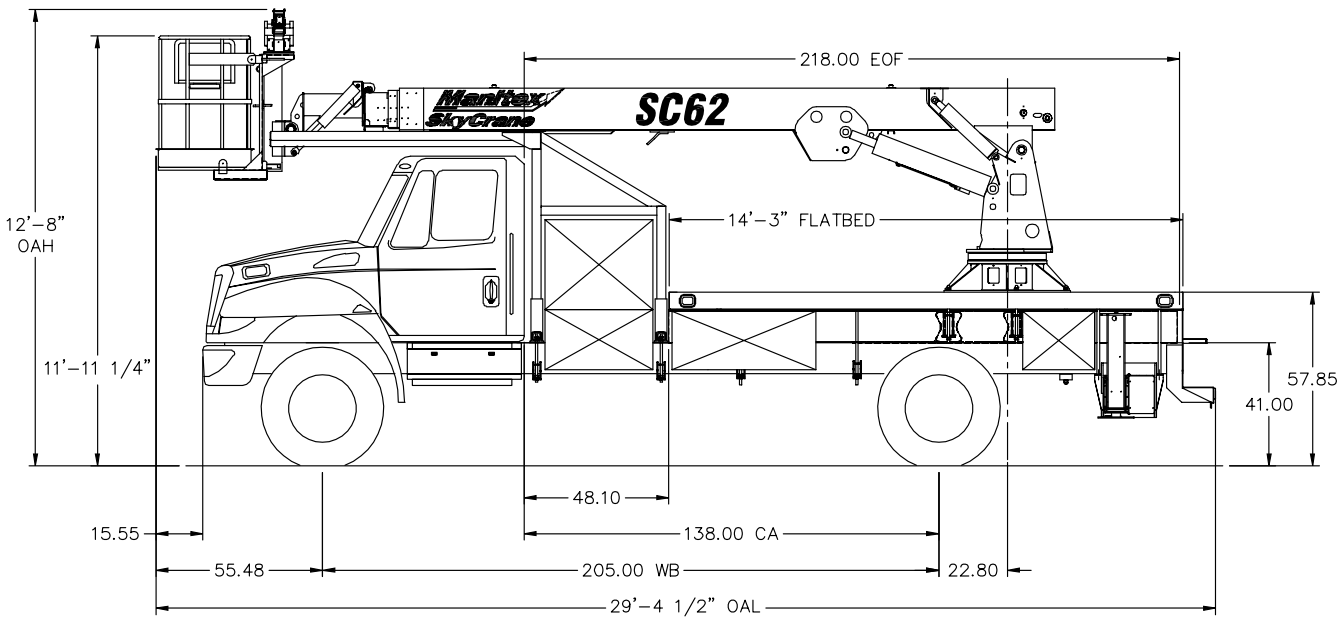

DEDUCTIONS

Overhaul Weight	40 lb
Snatch Block	40 lb
2-Manbasket SLR Platform	700 lb

WEIGHTS

1 Part Line	2 Part Line	WARNING
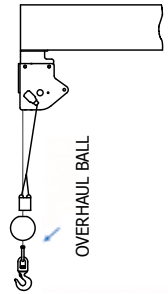	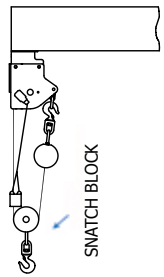	Anti-two-block system, if supplied, must be in good operating condition before operating crane. Refer to the owner's manual. Keep at least three wraps of load line on the drum at all times.
3,500 lb	6,000 lb	3/8" 6 x 25 IWRC (3.5:1 SF) 13,120 lb min. breaking strength

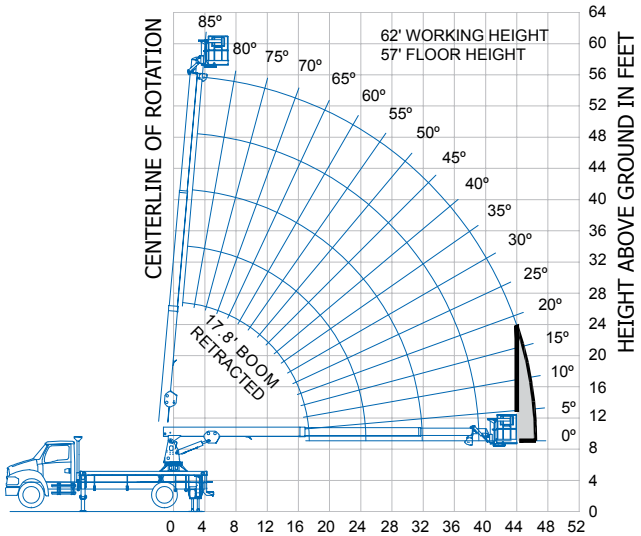

OPERATING RADIUS FROM CENTERLINE OF ROTATION IN FEET

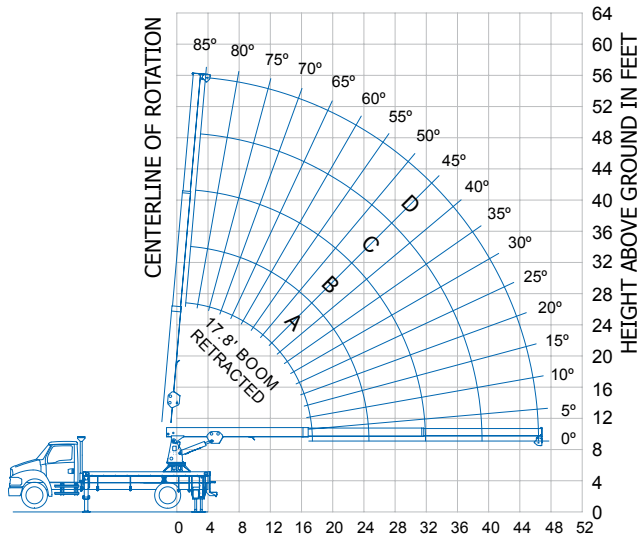

OPERATING RADIUS FROM CENTERLINE OF ROTATION IN FEET

The Gray Area represents a "no work" zone, do not place the basket in this area.

Meets ANSI B30.5 Requirements - Do not operate crane or accessories within 10' (3,05 m) of live power lines.
NOTICE: This chart is for reference only and must not be used for lifting purposes. Consult factory for other boom options.

LOAD CHART FOR CRANE APPLICATIONS ONLY

MAIN BOOM LOAD RATINGS IN LBS.
WITH OUTRIGGERS FULLY EXTENDED

Boom Length	A		B		C		D			
Operating Radius	17.8 Feet		25.1 Feet		32.3 Feet		39.6 Feet		46.8 Feet	
Feet	∠	lb.	∠	lb.	∠	lb.	∠	lb.	∠	lb.
8	63°	6,000	71°	6,000	76°	5,400				
10	55°	6,000	66°	5,150	72°	4,510	76°	4,220		
12	47°	5,710	61°	4,540	68°	3,900	73°	3,620	76°	3,420
14	37°	5,260	56°	4,100	64°	3,460	70°	3,180	74°	2,990
16	24°	4,920	50°	3,770	60°	3,120	67°	2,850	71°	2,650
18			44°	3,510	56°	2,860	64°	2,590	69°	2,390
20			37°	3,290	52°	2,650	60°	2,380	66°	2,180
24			14°	2,940	42°	2,330	53°	2,060	60°	1,860
28					29°	2,090	45°	1,830	54°	1,640
32							36°	1,650	48°	1,460
36							24°	1,510	41°	1,320
40									32°	1,210
44									20°	1,110

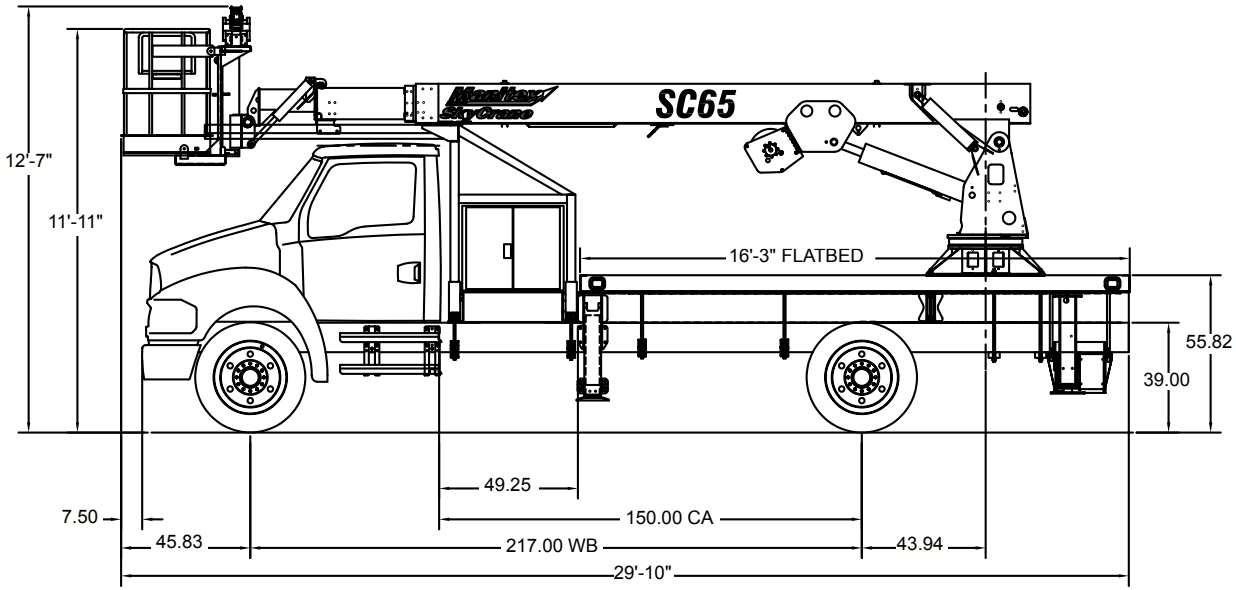

DEDUCTIONS

Overhaul Weight	40 lb
Snatch Block	40 lb
2-Manbasket SLR Platform	700 lb

WEIGHTS

1 Part Line	2 Part Line	WARNING
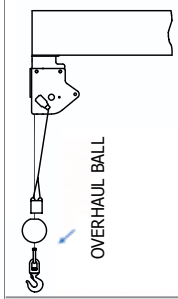	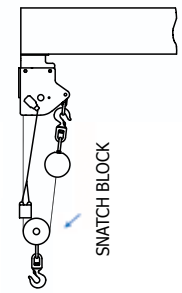	Anti-two-block system, if supplied, must be in good operating condition before operating crane. Refer to the owner's manual. Keep at least three wraps of load line on the drum at all times.
3,500 lb	6,000 lb	3/8" 6 x 25 IWRC (3.5:1 SF) 13,120 lb min. breaking strength

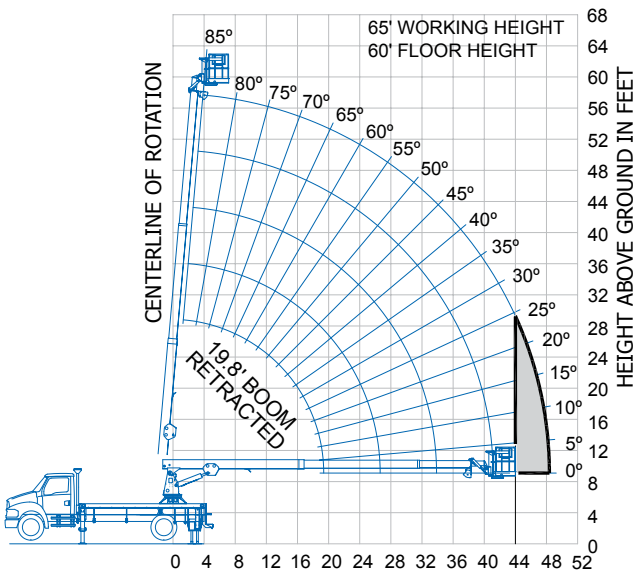

OPERATING RADIUS FROM CENTERLINE OF ROTATION IN FEET

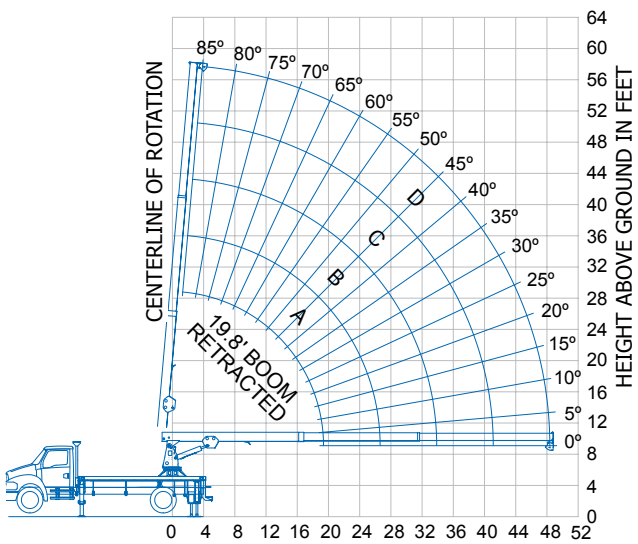

OPERATING RADIUS FROM CENTERLINE OF ROTATION IN FEET

The Gray Area represents a "no work" zone, do not place the basket in this area.

Meets ANSI B30.5 Requirements - Do not operate crane or accessories within 10' (3,05 m) of live power lines.
NOTICE: This chart is for reference only and must not be used for lifting purposes. Consult factory for other boom options.

LOAD CHART FOR CRANE APPLICATIONS ONLY

MAIN BOOM LOAD RATINGS IN LBS.
WITH OUTRIGGERS FULLY EXTENDED

	Boom Length		A		B		C		D	
Operating Radius	19.8 Feet		27.0 Feet		34.3 Feet		41.5 Feet		48.8 Feet	
Feet	∠	lb.	∠	lb.	∠	lb.	∠	lb.	∠	lb.
8	66°	6,000	73°	5,910	77°	5,320				
10	59°	6,000	68°	5,020	73°	4,430	77°	4,170		
12	52°	5,420	64°	4,410	70°	3,820	74°	3,560	77°	3,380
14	44°	4,980	59°	3,970	66°	3,380	71°	3,130	75°	2,940
16	35°	4,640	54°	3,640	62°	3,050	68°	2,790	72°	2,610
18	23°	4,360	48°	3,370	58°	2,790	65°	2,530	70°	2,350
20			42°	3,160	54°	2,580	62°	2,320	67°	2,140
24			26°	2,830	45°	2,250	55°	2,000	62°	1,820
28					35°	2,020	48°	1,770	56°	1,590
32					20°	1,830	40°	1,600	50°	1,420
36							30°	1,460	43°	1,280
40							15°	1,330	36°	1,170
44									26°	1,080
48									9°	970

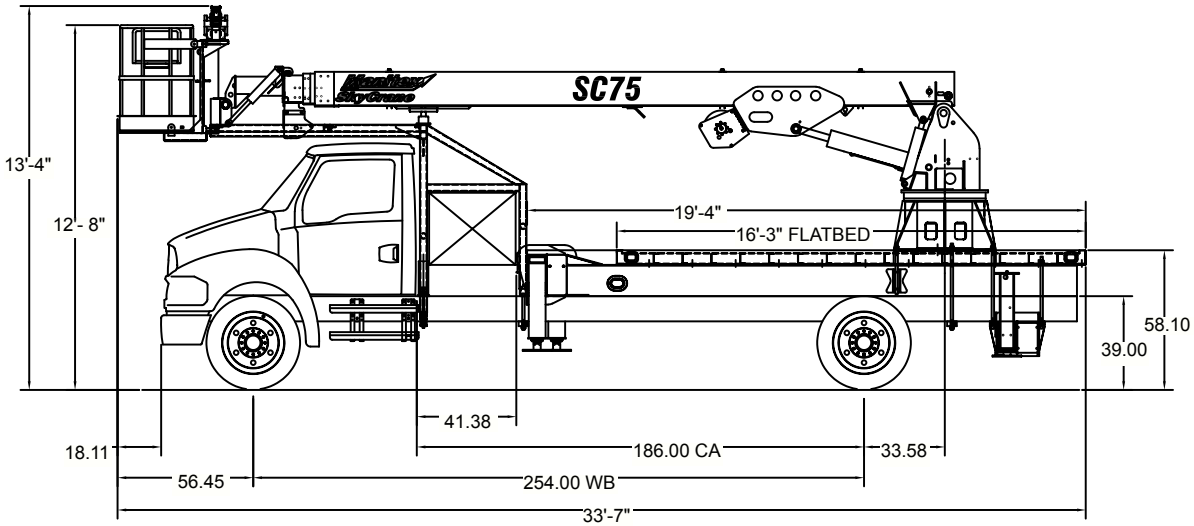

DEDUCTIONS

Overhaul Weight	40 lb
Snatch Block	40 lb
2-Manbasket SLR Platform	700 lb

WEIGHTS

1 Part Line	2 Part Line	WARNING
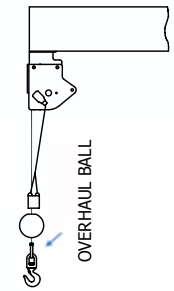	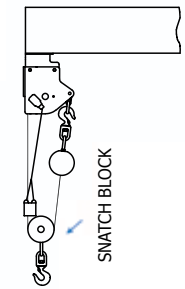	Anti-two-block system, if supplied, must be in good operating condition before operating crane. Refer to the owner's manual. Keep at least three wraps of load line on the drum at all times.
3,500 lb	6,000 lb	3/8" 6 x 25 IWRC (3.5:1 SF) 13,120 lb min. breaking strength

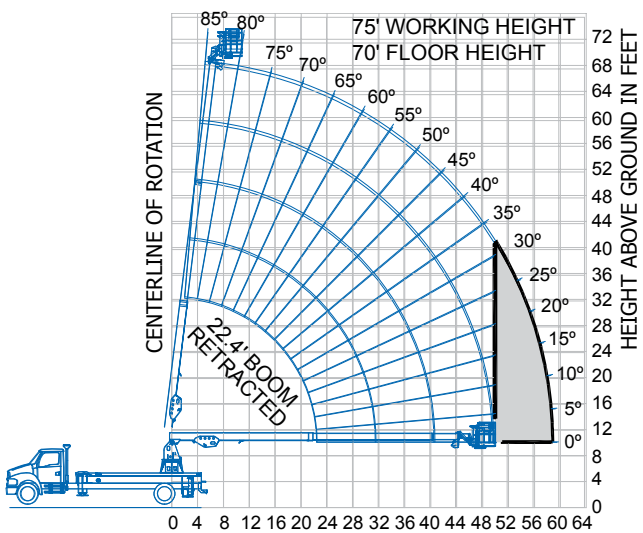

OPERATING RADIUS FROM CENTERLINE OF ROTATION IN FEET

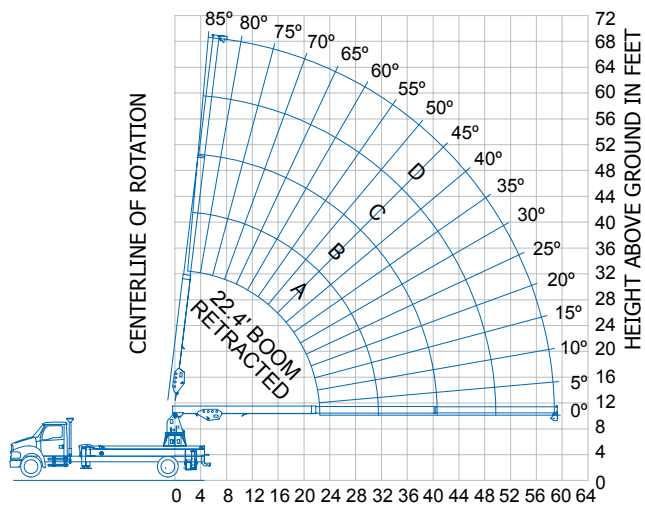

OPERATING RADIUS FROM CENTERLINE OF ROTATION IN FEET

The Gray Area represents a "no work" zone, do not place the basket in this area.

Meets ANSI B30.5 Requirements - Do not operate crane or accessories within 10' (3,05 m) of live power lines.
NOTICE: This chart is for reference only and must not be used for lifting purposes. Consult factory for other boom options.

LOAD CHART FOR CRANE APPLICATIONS ONLY

MAIN BOOM LOAD RATINGS IN LBS.
WITH OUTRIGGERS FULLY EXTENDED

	Boom Length		A		B		C		D	
Operating Radius	22.4 Feet		31.5 Feet		40.6 Feet		49.7 Feet		58.8 Feet	
Feet	∠	lb.	∠	lb.	∠	lb.	∠	lb.	∠	lb.
8	71°	5,450	77°	4,970	80°	4,500				
10	65°	5,360	73°	4,850	77°	4,350	80°	3,750		
12	60°	5,300	69°	4,750	74°	4,200	78°	3,600	80°	3,000
14	53°	5,190	65°	4,620	71°	4,050	75°	3,490	78°	2,930
16	46°	5,080	61°	4,490	68°	3,900	73°	3,380	76°	2,870
18	39°	4,980	57°	4,360	65°	3,750	70°	3,280	74°	2,810
20	29°	4,780	52°	4,180	62°	3,580	68°	3,160	72°	2,750
24			42°	3,780	55°	3,210	63°	2,910	68°	2,620
28			29°	3,380	48°	2,840	57°	2,670	64°	2,500
32					39°	2,360	52°	2,350	59°	2,350
36					29°	1,980	45°	2,020	54°	2,070
40					11°	1,620	38°	1,710	49°	1,800
44							29°	1,480	44°	1,580
48							17°	1,250	37°	1,290
52									30°	1,000
56									20°	800

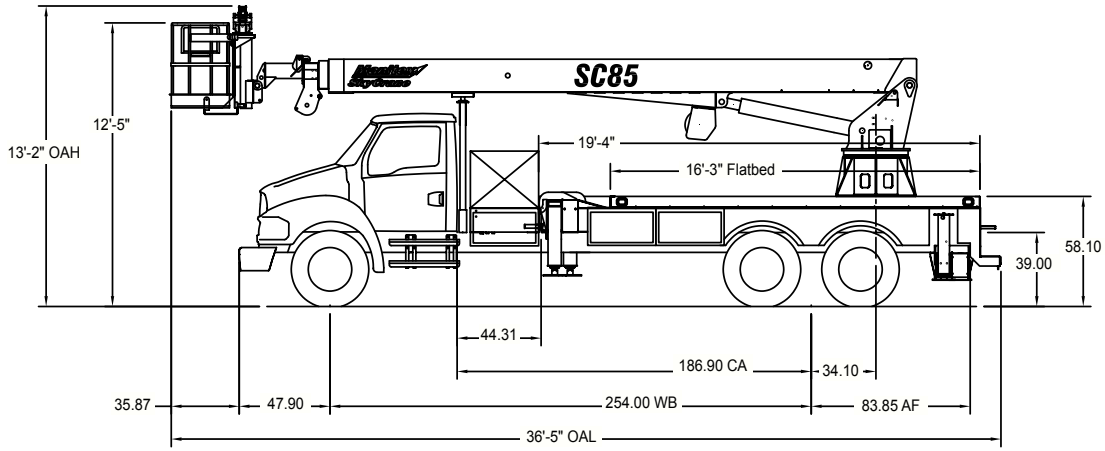

DEDUCTIONS

Overhaul Weight	See Manufacturer Nameplate
Snatch Block	See Manufacturer Nameplate
2-Manbasket SLR Platform	700 lb

WEIGHTS

1 Part Line	2 Part Line	3 Part Line	4 Part Line	WARNING
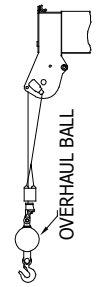	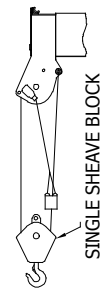	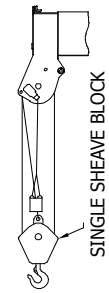	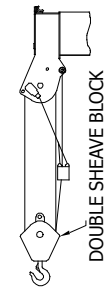	Anti-two-block system, if supplied, must be in good operating condition before operating crane. Refer to the owner's manual. Keep at least three wraps of load line on the drum at all times.
5,840 lb	11,680 lb	17,520 lb	23,360 lb	1/2" ROT RESISTANT (5:1 SF) 29,200 lb. min Breaking Strength
6,000 lb	12,000 lb	18,000 lb	24,000 lb	1/2" 6x25 IWRC (3.5:1 SF) 23,000 lb. min Breaking Strength

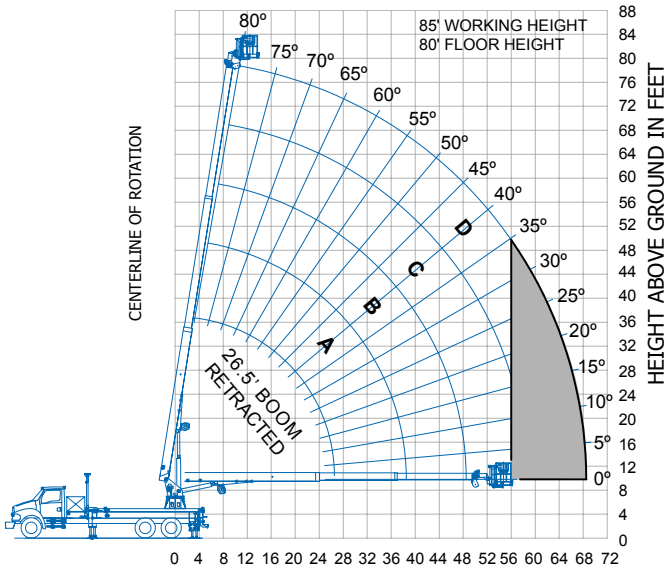

OPERATING RADIUS FROM CENTERLINE OF ROTATION IN FEET

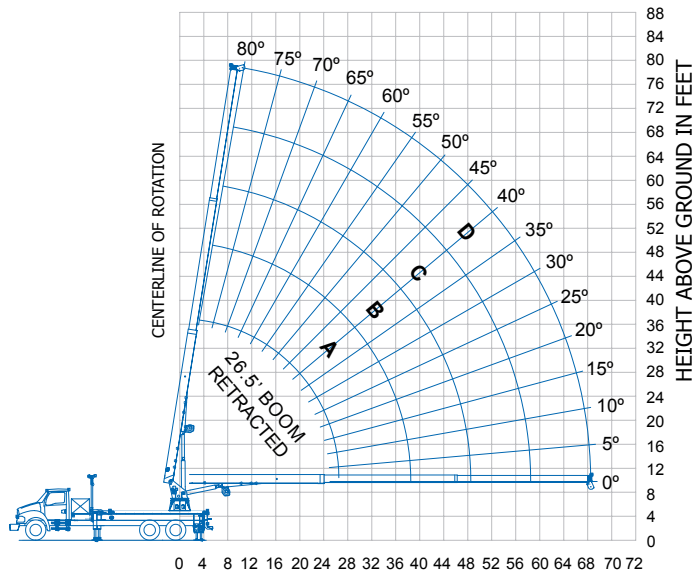

OPERATING RADIUS FROM CENTERLINE OF ROTATION IN FEET

The Gray Area represents a "no work" zone, do not place the basket in this area.

Meets ANSI B30.5 Requirements - Do not operate crane or accessories within 10' (3,05 m) of live power lines.
NOTICE: This chart is for reference only and must not be used for lifting purposes. Consult factory for other boom options.

LOAD CHART FOR CRANE APPLICATIONS ONLY

MAIN BOOM LOAD RATINGS IN LBS. WITH OUTRIGGERS FULLY EXTENDED

Operating Radius	Boom Length		A		B		C		D	
	26.5 Feet		40 Feet		50 Feet		60 Feet		70 Feet	
Feet	∠	lb.	∠	lb.	∠	lb.	∠	lb.	∠	lb.
5	78°	24,000								
8	71°	17,030	78°	15,840						
10	67°	14,380	75°	13,230	78°	12,740				
12	62°	12,480	72°	11,370	76°	10,900	79°	10,570		
14	57°	11,040	69°	9,990	73°	9,520	77°	9,200	79°	8,960
16	51°	9,880	66°	8,910	71°	8,460	75°	8,140	78°	7,900
18	45°	8,910	63°	8,040	69°	7,600	73°	7,290	76°	7,060
20	38°	8,040	59°	7,320	66°	6,900	71°	6,600	74°	6,370
24	18°	6,180	52°	6,180	61°	5,810	67°	5,530	71°	5,310
28			44°	5,300	55°	5,000	62°	4,730	67°	4,520
32			35°	4,540	49°	4,350	58°	4,120	64°	3,920
36			22°	3,730	43°	3,800	53°	3,620	60°	3,440
40					35°	3,320	48°	3,200	56°	3,040
44					26°	2,820	43°	2,830	52°	2,700
48					10°	2,060	36°	2,490	47°	2,400
52							29°	2,150	42°	2,140
56							19°	1,730	37°	1,890
60									31°	1,640
64									23°	1,360
68									9°	900

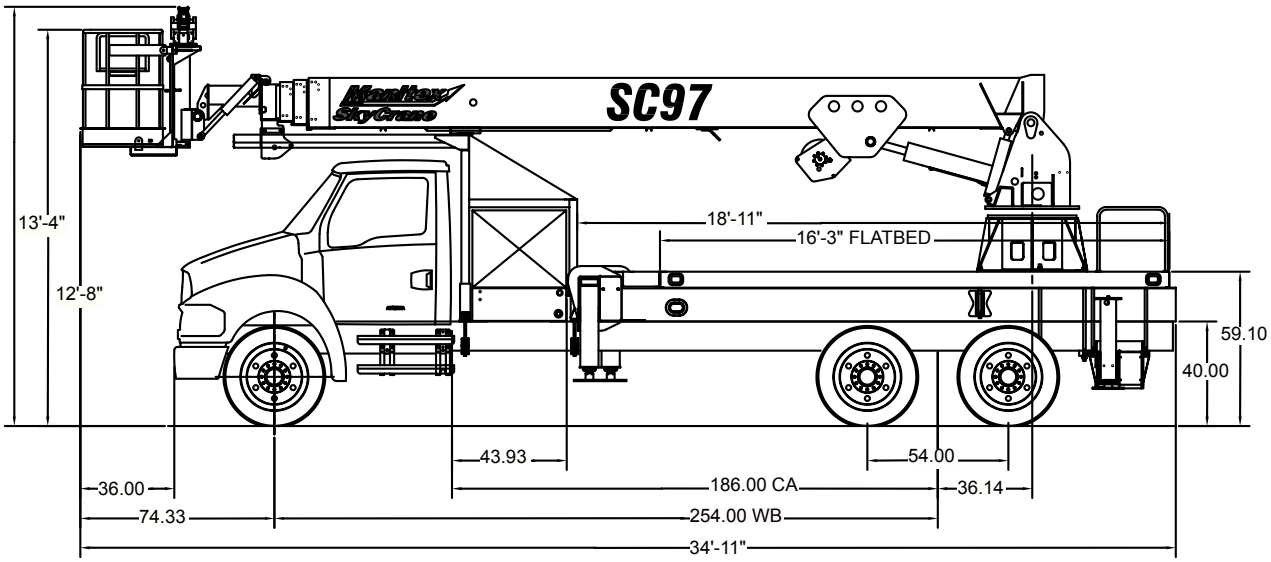

DEDUCTIONS

Overhaul Weight	80 lb
Snatch Block	40 lb
2-Manbasket SLR Platform	700 lb

WEIGHTS

1 Part Line	2 Part Line	WARNING
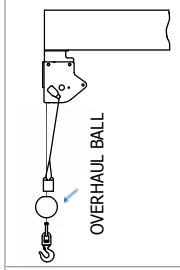	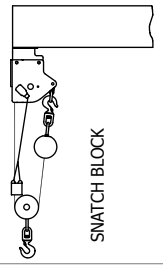	Anti-two-block system, if supplied, must be in good operating condition before operating crane. Refer to the owner's manual. Keep at least three wraps of load line on the drum at all times.
4,000 lb	6,000 lb	1/2" 6 x 25 IWRC (3.5:1 SF) 14,000 lb min. breaking strength

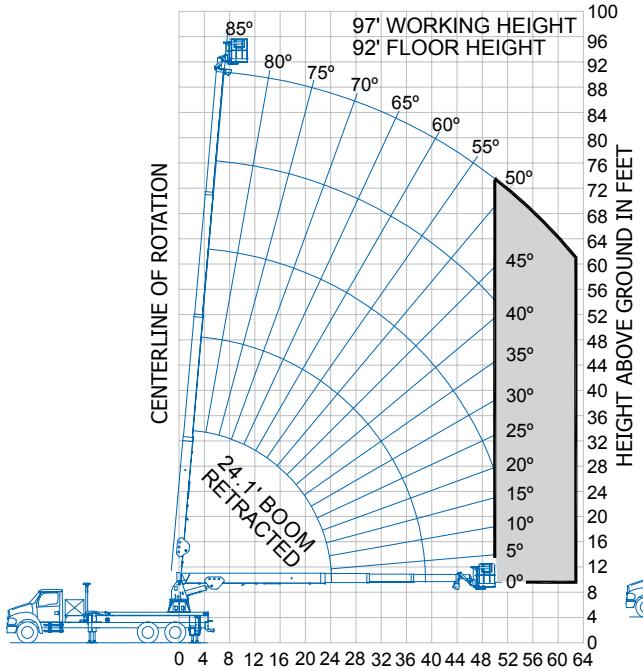

The Gray Area represents a "no work" zone, do not place the basket in this area.

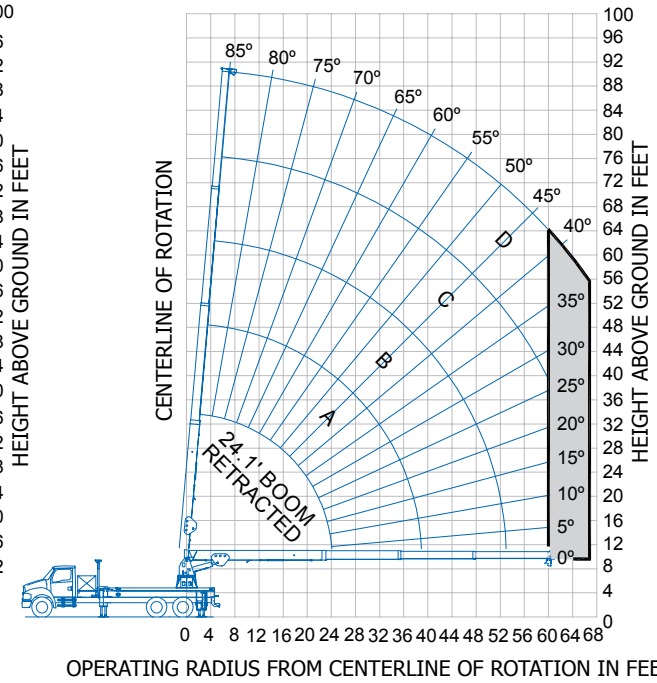

The Gray Area represents a "no work" zone, do not place the boom or load in this area.

LOAD CHART FOR CRANE APPLICATIONS ONLY

MAIN BOOM LOAD RATINGS IN LBS. WITH OUTRIGGERS FULLY EXTENDED

	Boom Length		A		B		C		D	
Operating Radius	24.1 Feet		39 Feet		53 Feet		67 Feet		81.1 Feet	
Feet	∠	lb.	∠	lb.	∠	lb.	∠	lb.	∠	lb.
8	73°	6,000	80°	6,000	83°	5,500				
10	68°	6,000	77°	6,000	81°	5,270	83°	4,000		
12	63°	6,000	74°	5,520	78°	5,050	81°	4,000	84°	3,200
14	57°	5,690	71°	5,250	76°	4,820	80°	3,960	82°	3,100
16	51°	5,380	68°	4,990	74°	4,600	78°	3,800	81°	3,010
18	44°	5,070	64°	4,720	72°	4,370	76°	3,640	79°	2,910
20	37°	4,760	61°	4,450	69°	4,150	74°	3,480	77°	2,820
24	9°	4,150	54°	3,920	64°	3,700	71°	3,160	75°	2,630
28			46°	3,230	60°	3,250	67°	2,840	72°	2,440
32			37°	2,800	54°	2,800	63°	2,520	69°	2,250
36			24°	2,200	49°	2,350	59°	2,200	66°	2,060
40					42°	1,900	55°	1,880	63°	1,870
44					35°	1,500	51°	1,590	59°	1,680
48					27°	1,160	46°	1,250	56°	1,350
52					13°	870	41°	970	52°	1,070
56							35°	750	48°	820
60							28°	530	44°	600

Meets ANSI B30.5 Requirements - Do not operate crane or accessories within 10' (3,05 m) of live power lines.
NOTICE: This chart is for reference only and must not be used for lifting purposes. Consult factory for other boom options.

AREA OF OPERATION

Models:
SC62, SC65, SC75, SC97

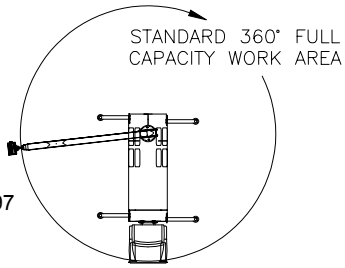

AREA OF OPERATION

Model: SC85

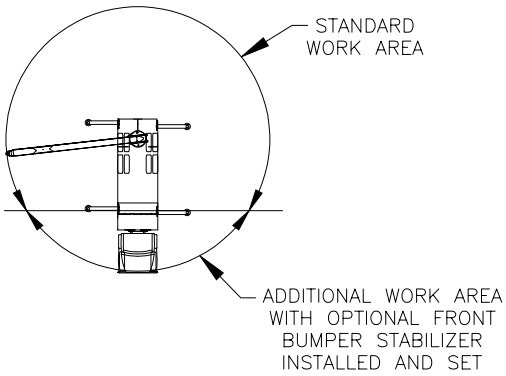

CHASSIS DATA	SC62	SC65	SC75	SC85	SC97
Chassis RBM (per rail)	1,600,000 in-lbs	1,600,000 in-lbs	1,600,000 in-lbs	1,600,000 in-lbs	1,600,000 in-lbs
Front Axle Gross Weight Rating	12,000 lbs	12,000 lbs	12,000 lbs	16,000 lbs	16,000 lbs
Rear Axle Gross Weight Rating	21,000 lbs	21,000 lbs	21,000 lbs	34,000 lbs	34,000 lbs
Minimum Truck Axle Weight - Front*	6500	6500	6650	7000	7000
Minimum Truck Axle Weight - Rear*	4100	4100	4100	6500	6500
Cab-to-Axle Distance (typ)	138"	150"	187"	187"	187"
Cab-to-End-of-Frame Distance (typ)	245"	245"	276"	276"	276"
Wheelbase (typ)	205"	217"	254"	254"	254"

*Minimum chassis weight is required to meet 85% stability requirements.
Chassis data is general - not for engineering. Some dimensions change depending on truck selection and machine options ordered.

OPTIONAL EQUIPMENT

Work Platform – Gravity Leveled
30” X 46“ work platform with 42” high rails and safety lanyard anchor points. Each platform is equipped with a full body harness and lanyard. Basket is secured and cushioned by manual friction brakes and shock absorbers. Platform capacity is 300 lbs.

SLR Work Platform – Self Leveling
30” X 54“ work platform with 42” high rails and safety lanyard anchor points. Each platform is equipped with a full body harness and lanyard. The self leveling system consists of one master cylinder mounted to the boom base that interfaces with the two slave cylinders at the platform mounting bracket that together form a hydraulic close-loop system. Platform capacity is 600 lbs.

Jib with hydraulic Winch in basket.
Winch capacity is 400 lbs.

Low oil level shutdown

Two part snatch block

Welder/Generator (200 amps, 5 KW)

Portable remote control module

Special paint colors (customer specified)

OPTIONAL EQUIPMENT

Special Body Rigging
- Front bulkhead at boom rest
- Over cab walkway/bulkhead
- Built in long Lamp Tray (in sub-frame)
- Wood or Steel Beds; 18’, 20’
- Full body skirting; steel or aluminum
- Rear step and bumper; steel or aluminum

Lamp/Tool Boxes
- Steel or Aluminum – Tool 1-1/2', 2', 3', 4', 5'
- Steel or Aluminum – Lamp 30”H x 36”W x 100” Lg. 20”H x 20”W x 120” Lg.

Remote Services in Basket And/Or Truck Body
- 110 VAC with GFI
- Weld Leads
- Compressed Air (from chassis)
- Water
- Pressure Washer
- Hydraulic Tool Circuit (6 GPM at basket)
- Oxygen/Acetylene Service

Manitex
SkyCrane
SC62

Manitex
SkyCrane
SC95

Manitex
SkyCrane
SC97

UPTime is the Manitex commitment to complete support of thousands of units working every day.

UPTime

- Includes 24-7-365 parts shipments.
- Utilizes the efficiency of UPNET online parts order system.
- Relies on Manitex's UPTrak support tracking system for performance analysis and resource allocation.
- Features REMan, Manitex's cost effective rebuild/exchange program.
- Provides expert service technicians for troubleshooting and site visits.
- Mandates training; at our facility and yours. It includes coordinated support from all component suppliers.
- Involves every Manitex team member in the support of every Manitex customer.

What does UPTime mean to Manitex customers?

UPTime means reliability.
UPTime means utilization.
UPTime means profitability.

Manitex
MOVING FORWARD FASTER

Manitex
3000 South Austin Avenue
Georgetown, TX, USA 78626-7544
Telephone 512-942-3000
Facsimile 512-863-3776
www.manitex.com

MTX-SC-Guide-EN-V3-0807